PREMIARC™ DW-309L

AWS A5.22 E309LT0-1/-4

Within the "DW stainless series," DW-309L is an exceptional flux-cored wire; it is an indispensable wire for welding dissimilar metal joints and the buffer layers for clad steel and overlaying.

Basic characteristics of DW-309L

The respective AWS classification designators, E309LT0-1 and E309LT0-4, will help you know the basic characteristics of DW-309L as follows.

E: designates an electrode.
309: indicates 309 type deposited metal (22%Cr-12%Ni as minimum).
L: designates low-carbon type (C%= 0.04 max.).
T: designates a tubular wire or a flux-cored wire.
0: indicates the intended welding positions are flat and horizontal.
1: indicates the suitable shielding gas is CO_2.
4: indicates the suitable shielding gas is 75-80%Ar + balanced CO_2.

What welding applications need DW-309L

Most plant and equipment in oil refineries, chemical plants, power generation plants, chemical tankers, liquefied gas plants and carriers, and food processing plants consists, on any scale, of dissimilar metal joints and clad steel components. This is to minimize the material costs and, simultaneously, maximize performance.

DW-309L is designed so that its weld metal can accommodate adverse effects caused by dilution by carbon or low-alloy base metals. The adverse effects include martensite (a brittle structure) formation and fully austenitic structure (non-ferrite-bearing austenite sensitive to hot cracking) formation in the weld metal. This feature makes DW-309L suitable for dissimilar metal joints which can contain various combinations of austenitic stainless steel and carbon or low alloy steels as shown in the following figures.

(1) Welding 304 or 304L stainless steel to carbon or low-alloy steel.

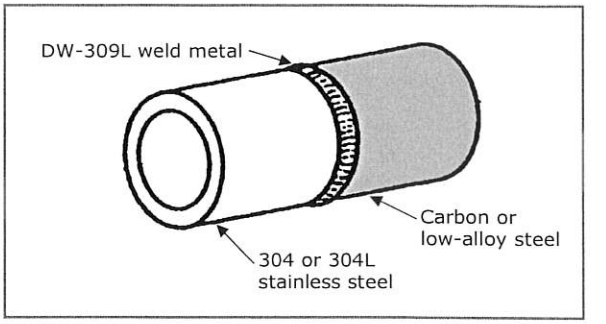

(2) Buffer layers in 304 or 304L clad steel welds.

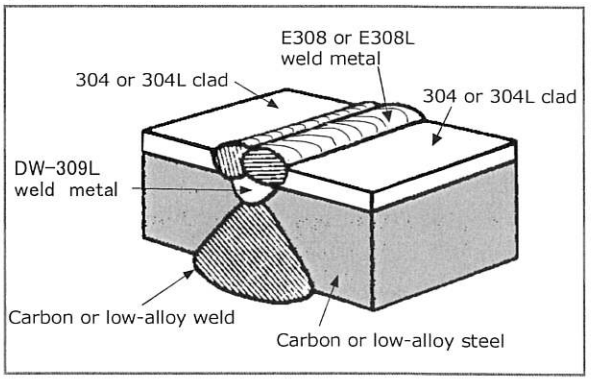

(3) Buffer layers in E308 or E308L overlay welds.

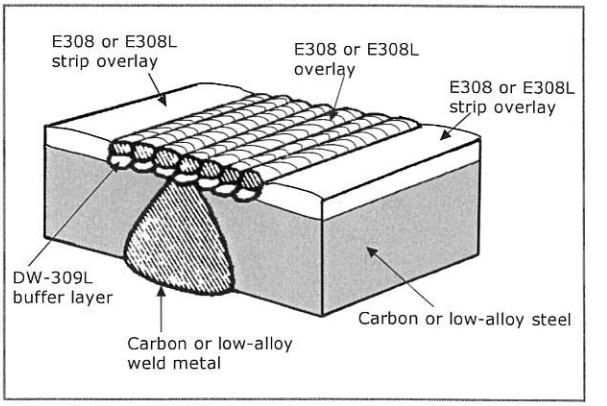

(4) Buffer layers in welding 304 or 304L stainless steel to carbon or low-alloy steel.